Interior dimensions		
Width	Depth	Height
548	528	423
Weight	Approx. 20 Kg	
Wall Thickness		7mm

REVISIONS				
ZONE	REV.	DESCRIPTION	DATE	APPROVED
-	0	Final Drawing	09/05/2013	Daniel Lopes

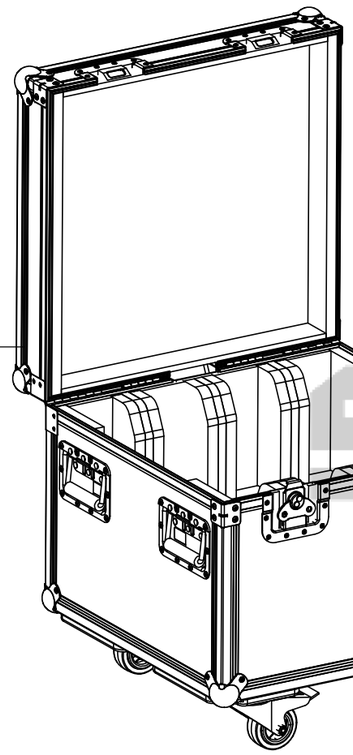

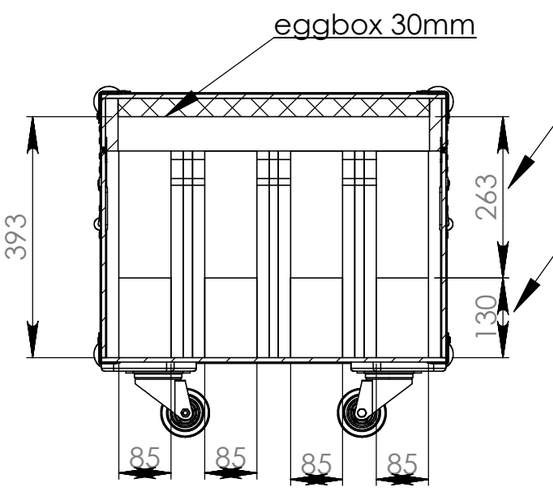

SECTION B-B

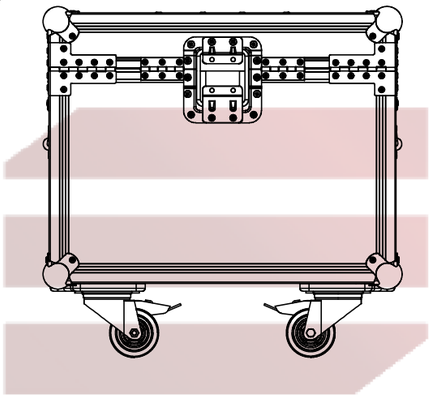

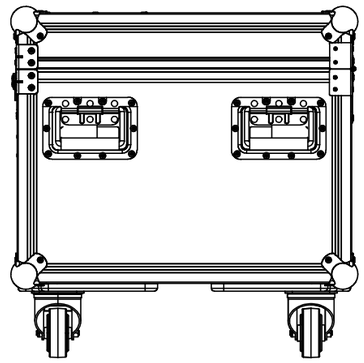

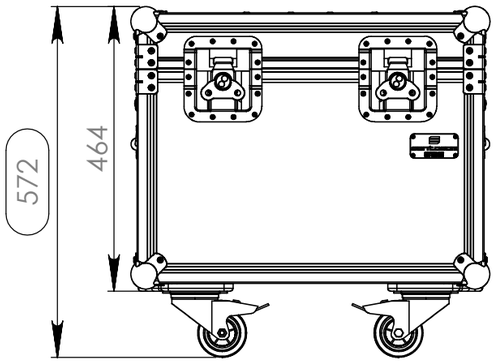

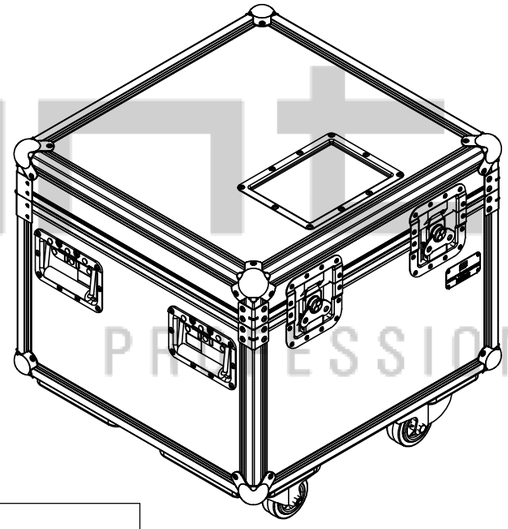

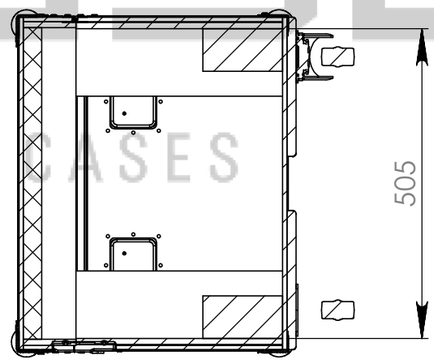

SECTION A-A

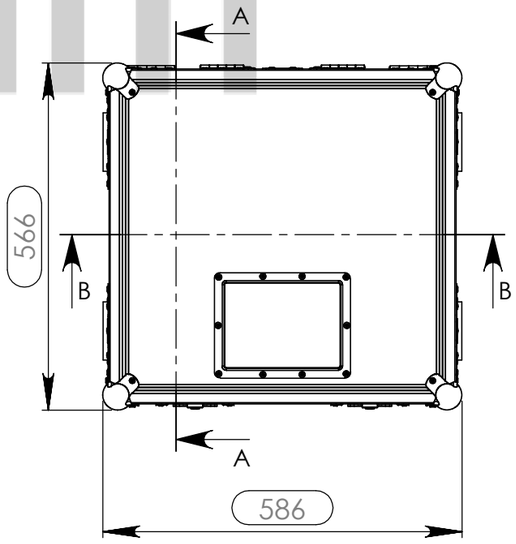

Hardware	
Qty	Description
8	Medium ball corner zinc plated
4	Large corner bracket f. 35mm case angle
2	Large butterfly V3 with 'push-back' function in 14mm dish
2	Medium duty butt hinge z./p.
2	110MM hinge shot
4	Recessed sprung handle medium model
2	Swivel castor Ø80 mm with brake
2	Swivel castor Ø80 mm without brake
1	Dish for 88001 Tour Label
1	Short recessed lidstay cranked

santosom
PROFESSIONAL CASES

	Name	Date
Drawn by	DanielLopes	09-05-2013
Reference	STROB.107	

A3

This drawing must not be copied or disclosed without consent of the owner

1st Angle projection

Scale 1:10 | units in mm DO NOT SCALE | general tolerance 0.8mm

FC, 4X SGM X-5 + GANCHO RODAS

santosom
PROFESSIONAL CASES